TRAVERSE STATION SUMMARY

STATION NO. : **7020.01** *(FORMER NO.* : _____ *)* *CLASS* : _____

LOCALITY : WONG FONG SHAN,KAT O CHAU *SURVEY SHEET NO.* : 4-NW-17B

HK 80 DATUM	*HK 1980 GRID COORDINATES* : N = **844 065.854** m , E = **847 852.002** m , Ht = **121.0** m (1) (By Survey) *Note (1): Height is above the HKPD and measured to the top of mark.* *LEVEL ACCURACY* :
WGS 84 DATUM	*GEOGRAPHICAL COORDINATES* : Lat _____, Long _____, Ht = _____ m (2) (By Transformation) *Note (2): Height is above the WGS 84 Ellipsoid and measured to the top of mark.* *GPS ACCURACY* : *REFERENCE FRAME*:

STATION SKETCH
(Not to scale)

TYPE OF MARK:
BEACON A

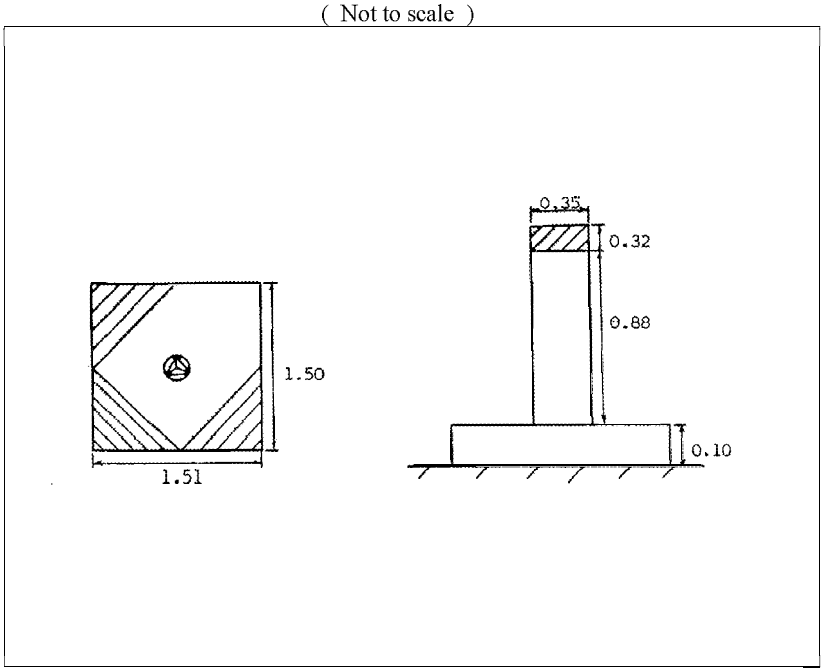

LOCATION MAP

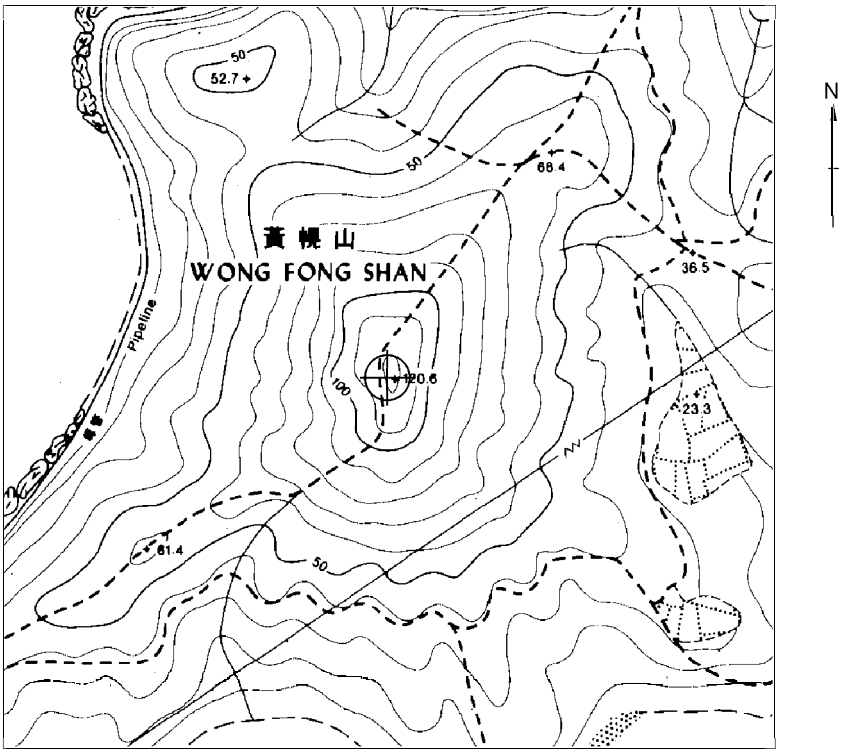

Scale : 1 / 5 000 Legend : = Station

REMARKS:

Prepared by : GEOD/NT Checked by : GEOD/NT Approved by : GEOD/NT
Date : 31/12/1998

Geodetic Survey Section
SMO, Lands Department
Copyright reserved